SCREWED END GLOBE VALVE

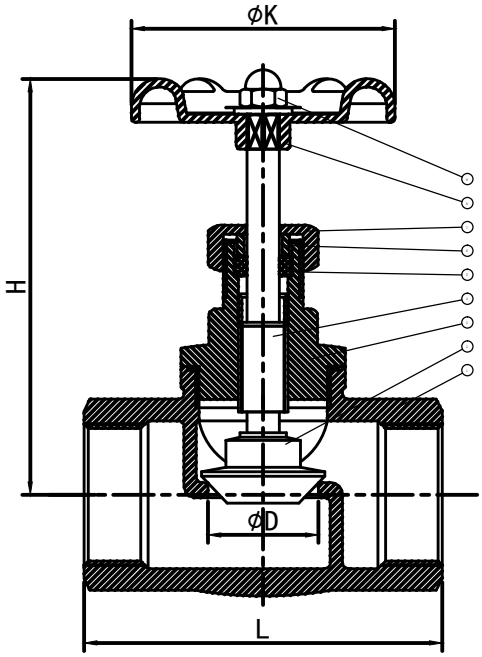

CLASS:200#

MAIN PARTS MATERIALS:

NO.	PART NAME	MATERIAL	
1	BODY	CF8M	
2	DISC	CF8M	
3	CAP	CF8M	
4	STEM	SS316	
5	PACKING	PTFE	
6	GLAND	SS316	
7	NUT	SS304	
8	HANDLE WHEEL	CAST IRON	
9	NUT	SS304	

MAIN SIZE:

SIZE	1/2"	3/4"	1"	$1\frac{1}{4}$"	$1\frac{1}{2}$"	2"
D	15	19	24	32	38	49
L	67	82	89	104	120	139
H	103	110	110	130	145	170
K	70	70	76	76	100	100